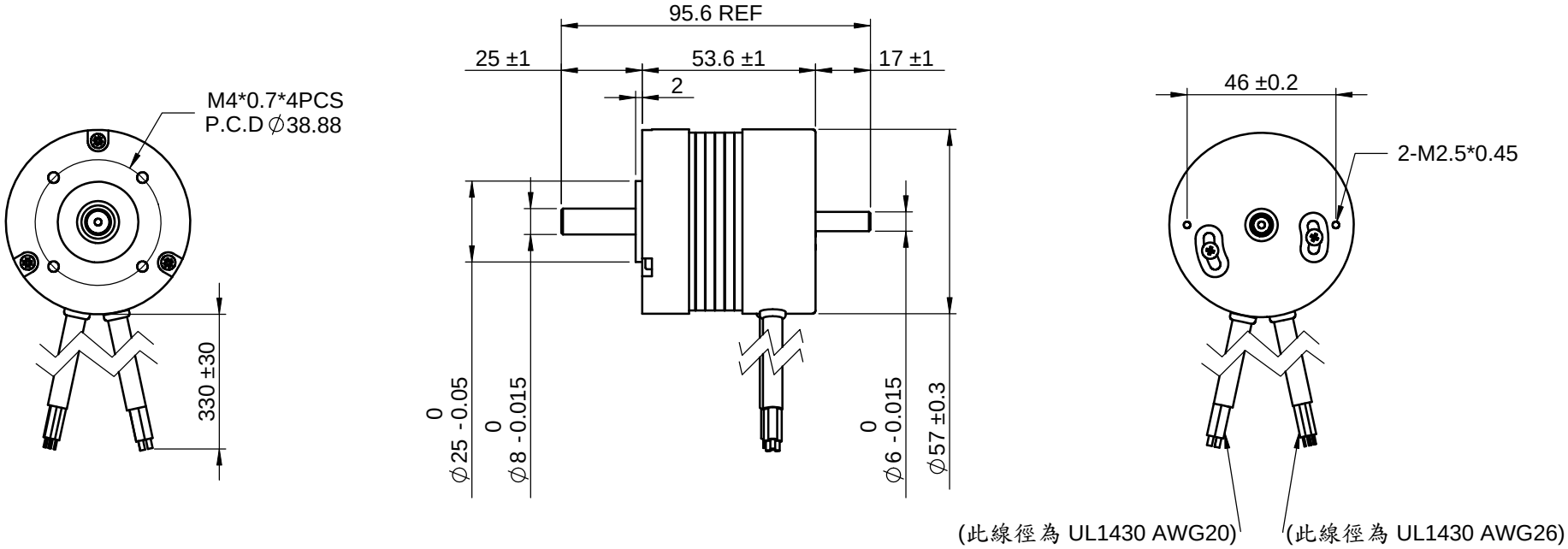

Hall 接線表		
Pin	Color	功能(說明)
1	Blue	Hall U
2	Black	GND
3	Green	Hall V
4	Red	+5V
5	White	Hall W

Motor 接線表		
Pin	Color	功能(說明)
1	Red	Motor U
2	Black	Motor V
3	Yellow	Motor W

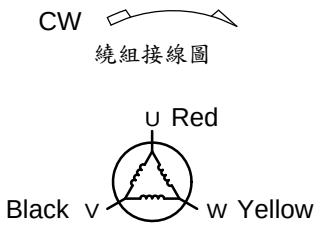

MODEL		NO LOAD		AT MAXIMUM EFFICIENCY				
JB57-F0H1A715		SPEED	CURRENT	SPEED	CURRENT	TORQUE	OUTPUT	EFF
NOMINAL	36V DC	RPM	A	RPM	A	kg-cm	W	%
		6000	0.24	5269	1.64	1.03	57.09	96.44

THIRD ANGLE PROJECTION

ALL DIMENSION ARE IN MM (UNLESS OTHERWISE SPECIFIED)

繪製比例: 1:2

製圖	JOANNE	Cheshire Electric Company,LLC
設計		Part No JB57-F0H1A715
審核	Adam	
材料		Name DC Brushless motor
完成時間	2011/9/29	REV. NO. A